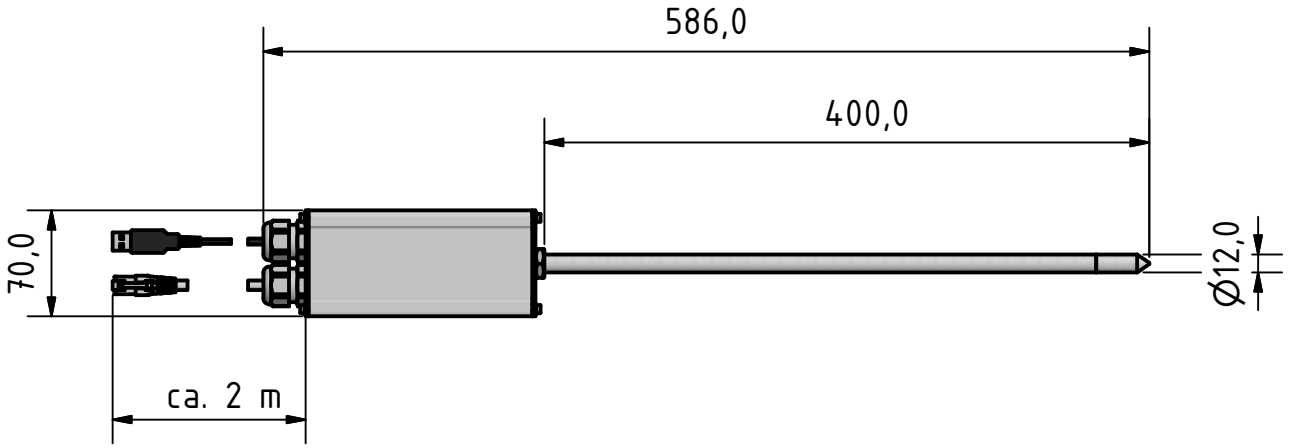
586,0
400,0
70,0
ca. 2 m
Ø12,0

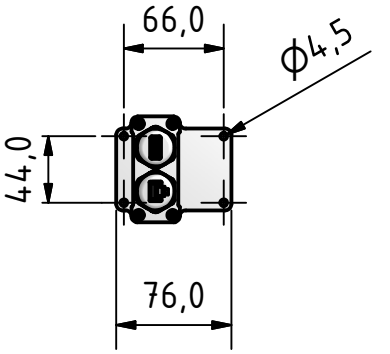
66,0
Ø4,5
44,0
76,0

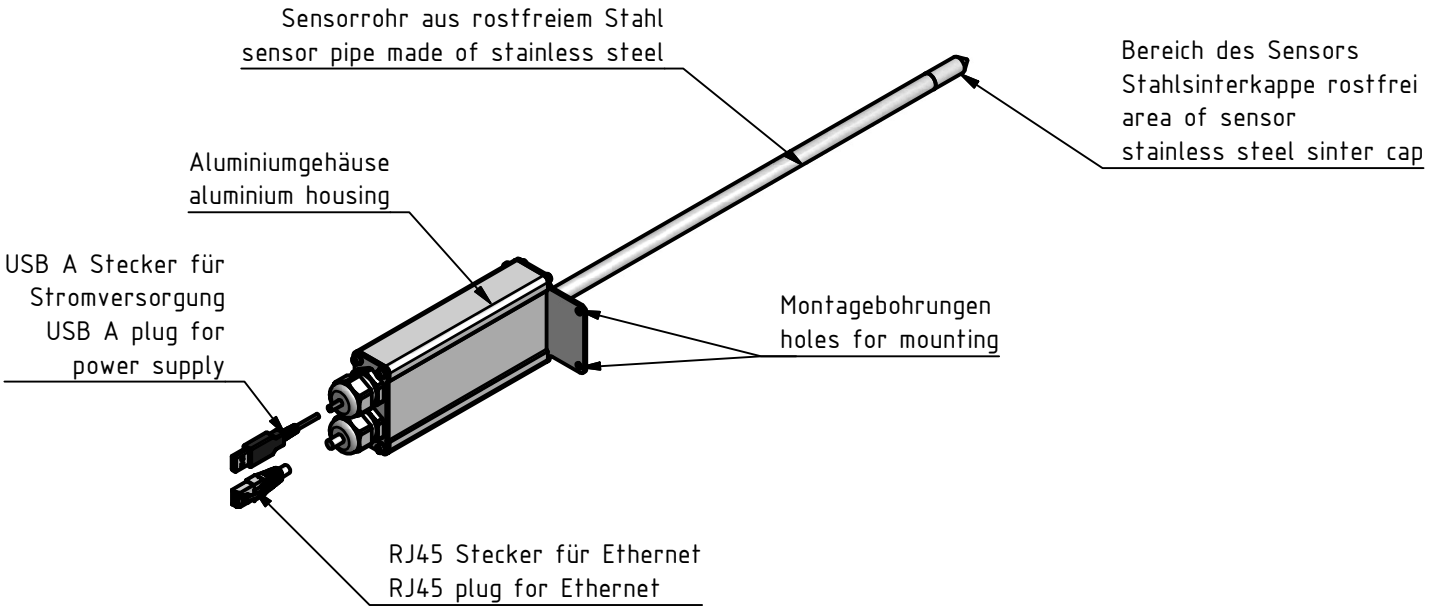
Sensorrohr aus rostfreiem Stahl
sensor pipe made of stainless steel
Bereich des Sensors
Stahlsinterkappe rostfrei
area of sensor
stainless steel sinter cap
Aluminiumgehäuse
aluminium housing
USB A Stecker für
Stromversorgung
USB A plug for
power supply
Montagebohrungen
holes for mounting
RJ45 Stecker für Ethernet
RJ45 plug for Ethernet